Panasonic

Installation Guide

Network Disk Recorder

Model No. WJ-NX200K/G

HDMI
HIGH-DEFINITION MULTIMEDIA INTERFACE

The Operating Instructions (PDF) is on the Panasonic support website (https://security.panasonic.com/download/).

Before attempting to connect or operate this product,
please read these instructions carefully and save this manual for future use.

The model number is abbreviated in some descriptions in this manual.

Contents

Introduction **4**
Standard accessories 4
About the user manuals 4
About Additional Camera Kit (option) 5
About Secure Communication Kit (option) 5
About the business intelligence function (option) 5
Precautions for installation 5
Basic operations 7
Setup menu 9
Operations flow **10**
1 Obtain the license (Registration Key) **12**
2 Installation of the hard disk drive **13**
Install the hard disk drives 13
(When replacing the hard disk drives) 14
3 Rack mounting **15**
Installation procedure 15
4 Connections **16**
Connection of cameras and a mouse 16
Connection of monitors 17
Connection of a PC 18
How to use the terminals of the ALARM/CONTROL 20
Connection example for emergency recording 20
Time and polarities of the ALARM/CONTROL connector 24
5 Turn on the devices **25**
Turn on the power of the recorder 25
(When turn off the power of the recorder) 26
6 Register the license (Registration Key) **27**
7 Configure the minimum settings [Easy Start] **29**
Troubleshooting **32**

Contents (continued)

Important Information

Refer to the Important Information (PDF) in the provided CD-ROM for the following items.

Safety Information	**· Important safety instructions**
Introduction	**· Preface · System requirements for a PC** **· Network security**
Precautions	**· Precautions for use**
Major operating controls	**· Major operating controls and their functions**
User management	**· User/Host management**
Others	**· Troubleshooting** **· Specifications**

Operating Instructions

Refer to the Operating Instructions (PDF) on the Panasonic support website for the following items.

Setup via recorder's main monitor	**· Basic setup** Set up date & time and language [Date/Language] Camera setup [Camera] Set up recording/events [REC & event] **· Advanced setup** Configure the settings relating to monitors [Monitor] Configure the settings relating to network [Network] Configure the settings relating to the user management [User management] Configure the settings relating to maintenance [Maintenance] Manage the hard disk drives [HDD management] Configure the settings relating to the extra functions [Extra function] **· Lists of the setting items**
Operation via recorder's main monitor	**· Monitor live images** Operate the camera **· Event function** **· Record images** **· Play recorded images** **· Useful functions** Copy recorded images Play back copied images with this recorder
Operation via PC web browser	**· Monitor live images** Operate the camera **· Event function** **· Play recorded images** **· Copy and download** Copy recorded images Download Play back the copied/downloaded images on a PC **· Setup**

Introduction

Standard accessories

CD-ROM*1 ..... 1 pc.
Mouse ..... 1 pc.
Installation Guide ..... 1 pc.
Quick Reference Guide ..... 1 pc.
Activation Key Card ..... 1 pc.
Terminal Plug (10 pin) ..... 1 pc.
Terminal Plug (11 pin) ..... 1 pc.
Cable Clamp ..... 2 pcs.
Dust caps for the front USBs*2 ..... 2 pcs.
Power cord ..... 2 pcs.
HDD fixing screw ..... 8 pcs.

*1 The CD-ROM contains the operating instructions (PDFs). Make sure to read them when installing or setting the recorder.
*2 Put the dust caps for the front USBs on the front copy port and mouse connection port to prevent dust brought by fan's intake while you are not using a mouse or an external storage device.

About the user manuals

There are 4 manuals provided for the WJ-NX200K/G as follows.

Installation Guide (this book):	Contains procedures of how to install/connect this product with devices and descriptions about "Easy Start".
Important Information (PDF):	Contains preface, precautions, and major operating controls and their functions and specifications.
Operating Instructions (PDF):	Contains descriptions of how to configure the required settings and how to operate this product. Refer to the Panasonic support website (https://security.panasonic.com/download/).
Quick Reference Guide:	Contains descriptions of how to operate functions frequently used.

Adobe® Reader® is required to read the PDF files (the setup instructions and the operating instructions) on the provided CD-ROM. When Adobe® Reader® is not installed on the PC, download the latest Adobe® Reader® from the Adobe web site and install it.

"NX200" shown in the instructions and illustrations used in these operating instructions indicate the WJ-NX200K/G.
Refer to "readme.txt" on the provided CD-ROM for further information about the optional dedicated software, compatible network cameras (hereinafter, cameras) and their versions.
Refer to the Panasonic support website (https://security.panasonic.com/support) for latest information about the compatible cameras and functions to be added or changed by firmware upgrade.
The external appearance in the document may differ from the actual product within no influence range on operation due to improvement of the product.

About Additional Camera Kit (option)

Number of cameras to be used in the system (9 cameras in basic system) can be increased to 16, 24 and 32 (maximum) by purchasing the Additional Camera Kit (WJ-NXE20, WJ-NXE20W: option). Refer to following table regarding camera numbers.

Additional Camera Kit WJ-NXE20, WJ-NXE20W	NX200 only (No additional license)	one Additional Camera Kit (one additional license)	two Additional Camera Kit (two additional licenses)	three Additional Camera Kit (three additional licenses)
	up to 9 cameras	up to 16 cameras	up to 24 cameras	up to 32 cameras

About Secure Communication Kit (option)

Registering a license of a secure communication kit (option) to the recorder enables secure communication* with cameras. Each secure communication kit differs in the number of cameras that can be registered as shown in the table below. Use several licenses as necessary.

* Encrypted communication using an electronic certificate

WJ-NXS01, WJ-NXS01W	WJ-NXS04, WJ-NXS04W	WJ-NXS16, WJ-NXS16W	WJ-NXS32, WJ-NXS32W
1 camera	4 cameras	16 cameras	32 cameras

About the business intelligence function (option)

Registering the license of the additional business intelligence kit WJ-NXF02, WJ-NXF02W (option) allows the recorder to detect faces whose features are similar to the registered faces by comparing face images in live image with the registered face images (face matching function). The statistical processing for the results of the face matching will also become available and it displays the result on the main monitor connected with the recorder.

Precautions for installation

This product is designed to be used indoors.

Panasonic assumes no responsibility for injuries or property damage resulting from failures arising out of improper installation or operation inconsistent with this documentation.

Do not place this product in the following places:

- Locations exposed to direct sunlight
- Locations subject to having strong vibration or impact
- Locations near magnetic field sources such as a television or speakers
- Locations near the devices that emit large sound and generate vibration by sound pressure
- Locations where condensation forms easily, where temperature changes greatly or where humidity level is high
- Locations subject to steam and oil smoke such as a kitchen
- Locations which are not level
- Locations subject to dust
- Locations where it may get wet from rain or water splash

Do not install this product in locations where the product or the cables can be destroyed or damaged by persons with malicious intent.

Place this product horizontally on a level surface.
Do not place this product in an upright position. When stacking multiple recorders, clear a space of more than 5 cm from both sides, the top, the bottom and the rear of the recorders.

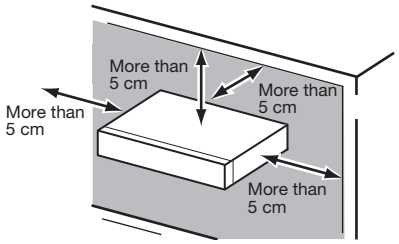

Heat dissipation
To prevent this product from overheating, heed the following. Failure to observe this may cause fire or trouble.

- Do not block the cooling fan outlet or the ventilation holes with a wall, rack, cloth, etc. Maintain the product periodically to prevent dust from blocking ventilation holes.
- The lifetime of the cooling fan is limited by use. It is recommended to replace them after around 30000 hours of operation. Contact your dealer for replacement of the cooling fans.
- Clear a space of more than 5 cm from both sides, the top, and the rear of the product. Do not block the ventilation holes on the front side since this product is designed to cool the hard disk drives by drawing in air from the front.

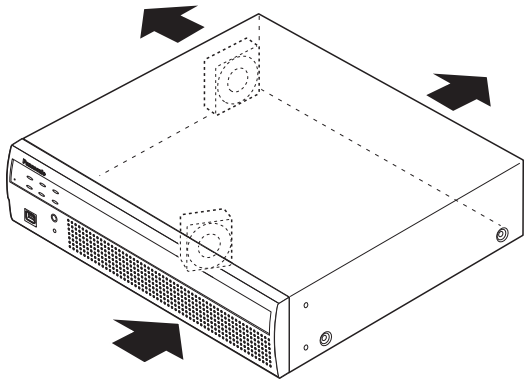

Avoid placing this product near noise sources
If the cables are placed near noise sources such as fluorescent lamps, noises may be produced. In this case, rewire avoiding the noise sources, or move the product to a place far from the source.

Grounding
Confirm that the wire is connected from the SIGNAL GND terminal to earth ground.
A grounding connection must be made before connecting the power plug or this product to the main power supply. When disconnecting the grounding wire, make sure that the power plug of this product is disconnected from the main power supply.

For BNC cable connection
Use only the recommended plug below when connecting the BNC plug to the connectors on the rear panel of this product.
Applicable plug: MIL-C39012C, MIL-C39012/16F or BS CECC2212: 1981
* Suffixes attached to the standards may be updated.

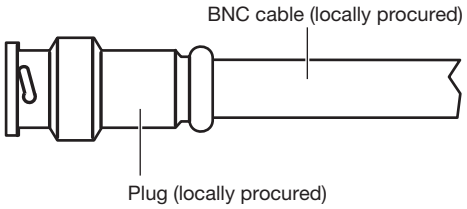

Tip dimensions inside the recommended BNC plug

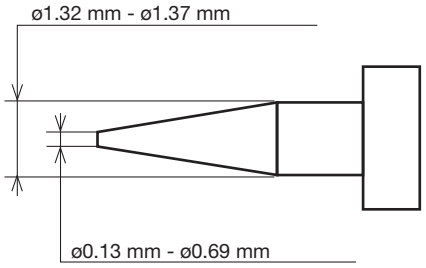

Important:

- A compatible plug shall be used. Failure to observe this may cause trouble such as poor contact. At worst, the connector of this product may be damaged.

Avoid placing receptacles that contain liquids such as water near this product.
If liquid spills onto this product, it may cause fire or an electric shock.

Shielded (STP) LAN cables must be used with this unit to ensure compliance with EMC standards.

About sulfuration of rubber products
Do not leave rubber products containing sulfur (packing and rubber feet) close to the recorder or in the same storing box. Sulfur constituent from the rubber products may cause sulfuration corrosion on electrical parts or terminals and defects in the recorder.

Basic operations

This section explains operation of a mouse and the soft keyboard, and setting screen only.
The recorder can be operated using the mouse (provided) connected to the mouse connection port either on the front or the rear side of the recorder.
It is also possible to perform settings and some operations of the recorder from the web browser. Refer to the Operating Instructions (PDF) for descriptions of how to operate from the web browser and the configurable settings using the web browser.

Connection of a mouse

Connect the provided mouse to the mouse connection port on the rear side of the recorder.
→ The mouse cursor will be displayed on the main monitor.

Mouse operation

Left-click the desired buttons and tabs on the screen. (Hereinafter, "Left-click..." will be described as "Click..." in this document.)
When the entry field has the [▲] and [▼] buttons or the [▼] button, the setting value can be changed using the mouse wheel.
When no operation is made for 10 seconds or more, the mouse cursor will be hidden. The mouse cursor will be displayed again when the mouse is moved.

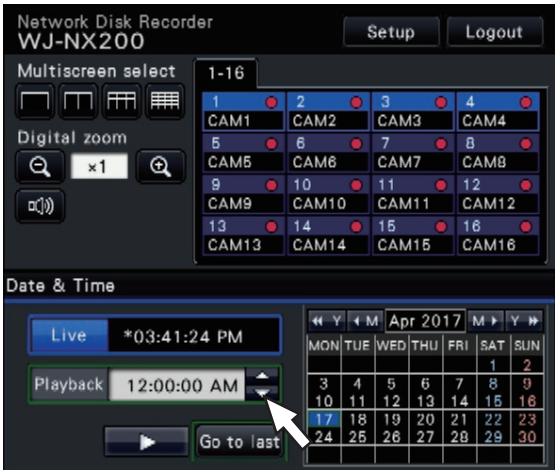

Display method of the setting screen

Click the [Setup] button.
→ The top screen of the setup menu will be displayed.

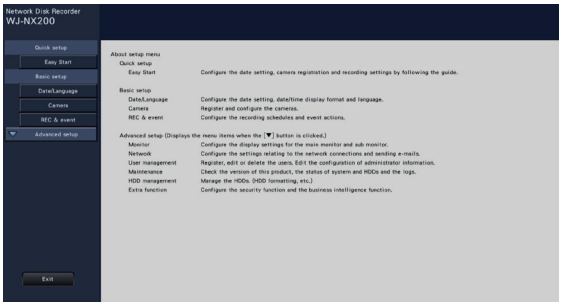

About the operation of on-screen keyboard

Use the on-screen keyboard to enter characters for the setting items. When clicking the [ ] icon beside the entry field, the on-screen keyboard will be displayed, and it will become possible to enter characters by clicking the character keys on the keyboard.

On-screen keyboard screen

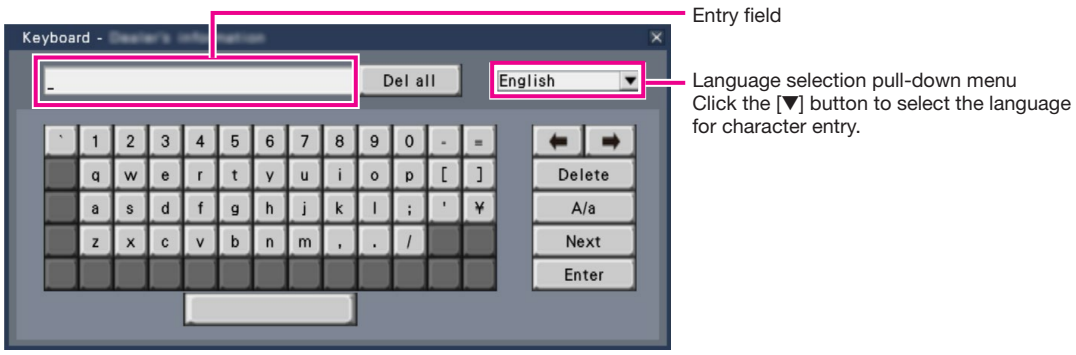

[Del all] button

Deletes all the characters in the entry field.

[←]/[→] button

Move the cursor in the entry field to either direction.

[Delete] button

Deletes a character pointed by the cursor in the entry field.

[A/a] button

This button changes the characters to be entered between capital letters and small letters.

[Next] button

Changes the keys to be displayed for character entry.
The displayed keys are changed as follows:

Keys for the language selected by the language selection pull-down menu → Combination characters → Special characters

[Enter] button

Determines the entered characters and closes the on-screen keyboard.

Note:

- Basic operations are also applied to the "Login" window and registration window for license.
- Click the [×] button to close the window without determining the entered characters.

Setup menu

Configuration of each setting item in the setup menu should be completed in advance to use this recorder.
The setup menu has the following levels for the setting items. On "Easy Start", the minimum settings required to operate the recorder will be performed, but other settings will remain default. On the [Basic setup] or [Advanced setup] page, the settings can be customized in accordance with a variety of operational modes.
The following is the example of the setup menu that describes the features and operations.
The setup menu will be displayed when clicking the [Setup] button (☞ Page 7) at the upper right corner of the operational screen on the main monitor.
The buttons of the setup pages will be displayed on the left column of the setup menu.

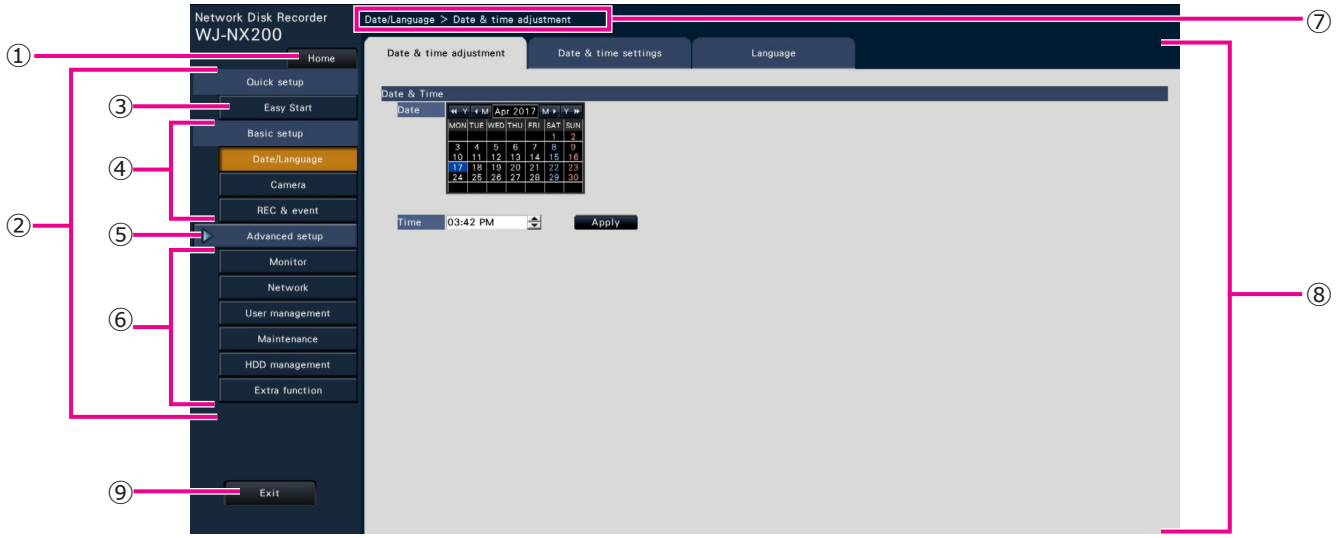

① **[Home] button**
It is possible to return to the top screen (☞ Page 7) of the setup menu from any setup page.

② **Setup menu panel**
Displays buttons of the setup pages.

③ **[Easy Start] button**
It is possible to configure the minimum settings required to operate the recorder, such as date & time and camera registration.

④ **[Basic setup] – Setup page buttons**
Each "Basic setup" page will be displayed.

⑤ **[Advanced setup] button**
The buttons to open the corresponding setup pages of the "Advanced setup" menu will be displayed. When clicking this button again, the buttons will be hidden.

⑥ **[Advanced setup] – Setup page buttons**
Each "Advanced setup" page will be displayed.

⑦ **Hierarchical display**
The name of the current setup page will be displayed in the hierarchy. The tab name will also be included.

⑧ **Setup page**
Displays each setup page. If the current setup page is composed of two or more tabs, it is possible to change the page display by clicking the tabs.

⑨ **[Exit] button**
Applies the settings to the recorder and closes the setup menu to return to the operational screen (☞ Page 11).

Except for some cases, the descriptions of this document follow the hierarchical display and setup pages.

Important:
- If the settings are applied, all login users will be forcibly logged out.

Operations flow

- **The main monitor is required for the settings.**
  *** The settings can be done through a web browser on the PC (Refer to the Operating Instructions (PDF)).**
- **The PC is required for reading the Important Information, the Operating Instructions (PDF) and camera settings.**

1 **Obtain the license (Registration Key)**
☞ **Page 12 and Activation Key Card**

Obtain the "Registration Key" of the recorder by following the instructions on the provided Activation Key Card. To increase the number of connected cameras, or to use the secure function or the business intelligence function, get the registration key of the additional license according to the appropriate Additional Kit (option). The obtained "Registration Key" will be used in Step **6**.

2 **Installation of the hard disk drive**
☞ **Page 13**

Install the hard disk drives in the recorder.

3 **Rack mounting**
☞ **Page 15**

Install the recorder in the rack. (☞ Page 15) Go to step **4** when not installing it in the rack.

4 **Connections**
☞ **Page 16**

Connect the camera and monitor to this product.

5 **Turn on the devices**
☞ **Page 25**

Turn on the power to launch in the following order.
①Turn on the power of the camera and the monitor.
②Turn on the power of the recorder.

6 **Register the license (Registration Key)**
☞ **Page 27**

Register the Registration Key of the recorder. If necessary, register the "Registration Key" for each Additional kit.

Important:
- Be sure to register the "Registration Key" of the recorder. If the "Registration key" of the recorder is not registered, the Additional Kit cannot be registered.

After registration, click [Restart] button on the license registration screen to reboot the recorder and activate the license.

Operations flow (continued)

7 **Configure the minimum settings [Easy Start]**
☞ Page 29

Register the date & time and cameras on "Easy Start". When it is not necessary to change other default settings, it is possible to start operations.

Setup
☞ Operating Instructions (PDF file on the Panasonic support website)

If necessary, perform the detailed settings for each function.

Start operations

When the camera image is displayed on the main monitor or the web browser on the PC and can be recorded or played, the recorder is ready for operation.

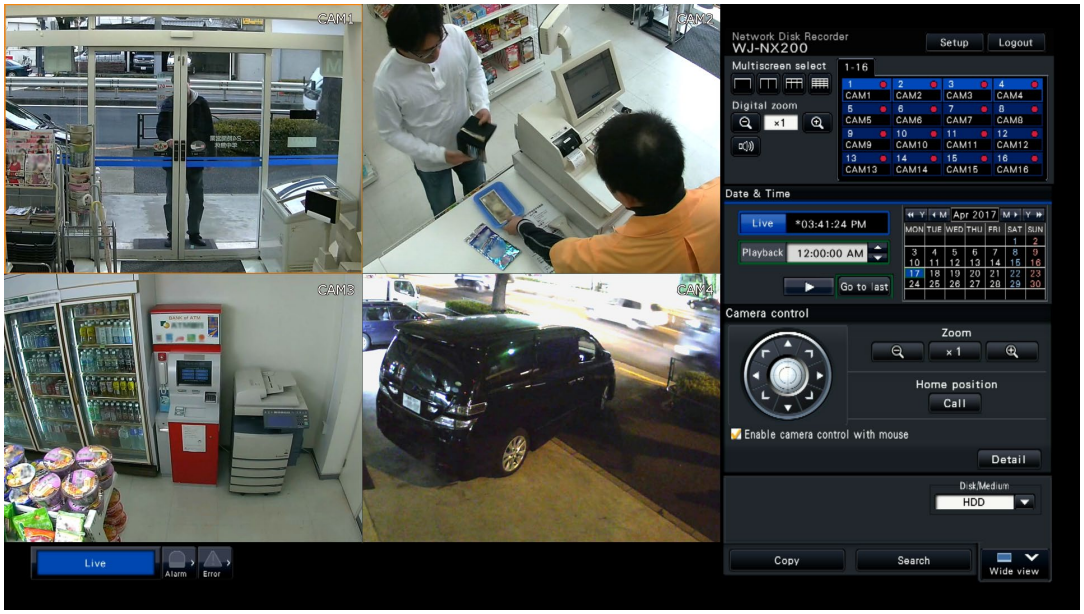

Example of an operational screen

1 Obtain the license (Registration Key)

Keep the "Activation Key Card" provided with the recorder nearby.
Obtain the "Registration Key" of the recorder by following the instructions on the provided Activation Key Card.
To increase number of connected cameras, get the registration key number of the additional camera license according to the Additional Camera Kit (option).
To use the secure function, get the registration key number of the additional secure license according to the Secure Communication Kit (option).
To use the business intelligence function, get the registration key of the additional business intelligence license according to the additional business intelligence kit (option).
* Each additional kit is the "Activation Key Card" with "the recorder ID number, activation ID number" for the applicable additional license.

Note:
- A PC or a mobile phone accessible to the Internet is necessary to acquire the registration key number.

2 Installation of the hard disk drive

Before installing the hard disk drives, turn off the power of the recorder first. When replacing the hard disk drives, the procedures will be same as those of installation. When installing or replacing the hard disk drives for playback use only (hard disk drives that are formerly used for recording), perform the link process.

Important:

- When securing the hard disk drives to the HDD brackets, do not mistake the direction of the connectors. (Do not install the hard disk drives in the opposite direction.)
- When installing hard disk drives, use a low-torque powered screwdriver or a torque screwdriver to tighten screws with the specified torque.
- Hard disk drives are precise devices. Handle with care while keeping the following in mind.
  - Do not subject the hard disk drive to any vibration or impact.
  - Before touching the hard disk drive, eliminate static electricity by touching a steel locker, etc. When holding the hard disk drive, hold the both sides of the hard disk drive.
  - Do not touch the circuit board or the connectors to prevent the hard disk drive from damaging by static electricity.
- Contact your dealer for hard disk drives that works on the recorder. Please be forewarned that operation with any hard disk drive other than the specified models is not guaranteed under any circumstances.
- When using multiple hard disk drives, use the same model.
- If different models are used together, even when the capacities of them are the same, the available capacity may be a few percent smaller.

Note:

- Hard disk drives are locally procured. Contact your dealer for purchasing, installing, and replacing the hard disk drives.

Install the hard disk drives

Installation or replacement of the hard disk drives

Step 1

Turn off the power of the recorder. (☞ Page 26)

Step 2

Remove the HDD bracket screws (x2) on the HDD slots on the rear panel of the recorder, and pull out the HDD bracket.

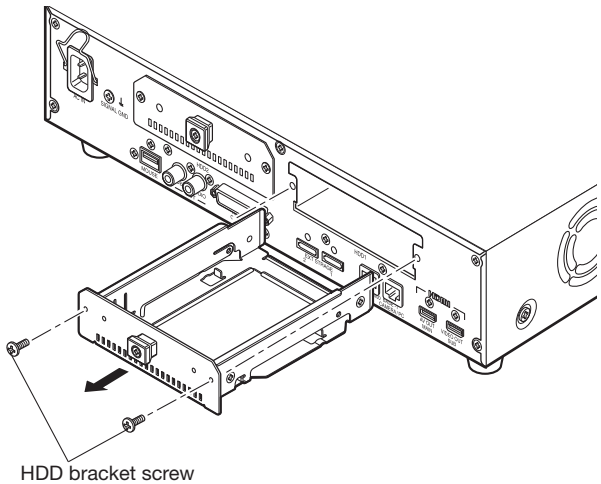

HDD bracket screw

Step 3

Install the hard disk drive into the HDD bracket using 4 HDD fixing screws (accessories).
Tightening torque for the screws: 0.49 N·m

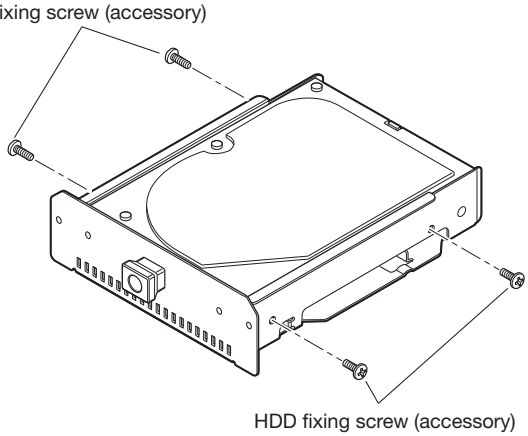

HDD fixing screw (accessory)

HDD fixing screw (accessory)

2 Installation of the hard disk drive (continued)

Step 4

Insert the HDD bracket with the hard disk drive all the way into the HDD slot, and secure the HDD bracket with the screws removed in Step 2.

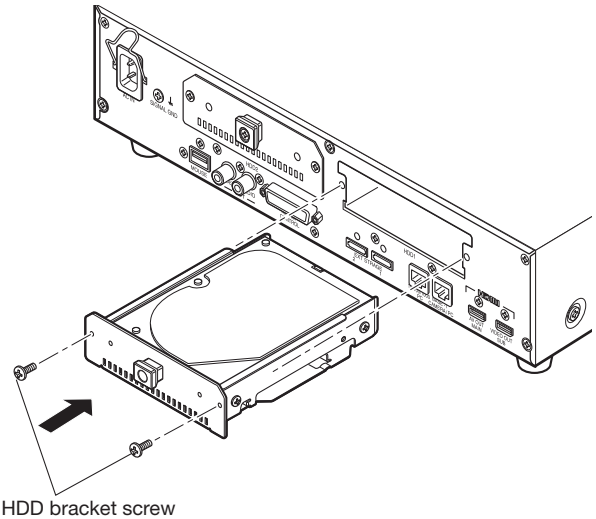

HDD bracket screw

Step 5

Turn on the power of the recorder. (☞ Page 25)

→ New hard disk drive will be formatted automatically. When the formatting is completed, the hard disk drive will become operable.
When the hard disk drive is formerly used for recording, perform the link process (☞ Operating Instructions (PDF)) on the "HDD management" page.
The status of hard disk drive can be checked on the setup menu - the "Maintenance" page - the "HDD information" tab. (☞ Operating Instructions (PDF))

(When replacing the hard disk drives)

When replacing a hard disk drive with another one, it is necessary to perform the removal process. In this case, do the following.

Step 1

Perform the removal process of the hard disk drive. (☞ Operating Instructions (PDF))

Step 2

Turn off the power of the recorder. (☞ Page 26)

Step 3

Pull out the HDD bracket from the rear panel of the recorder by referring to Step 2 of "Install the hard disk drives" (☞ Page 13).

Step 4

Install the hard disk drive into the HDD bracket by referring to Step 3 of "Install the hard disk drives" (☞ Page 13).

Step 5

Insert the HDD bracket with the hard disk drive into the HDD slot by referring to Step 4 of "Install the hard disk drives".

Step 6

Turn on the power of the recorder. (☞ Page 25)

→ New hard disk drive will be formatted automatically. When the formatting is completed, the hard disk drive will become operable.
When the hard disk drive is formerly used for recording, perform the link process (☞ Operating Instructions (PDF)) on the "HDD management" page.
The status of hard disk drive can be checked on the setup menu - the "Maintenance" page - the "HDD information" tab. (☞ Operating Instructions (PDF))

3 Rack mounting

Install the recorder in an EIA standard 19-inch rack (Depth: 550 mm or more).

Note:
- Use four M5 × 12 screws (locally procured) to install the recorder in a rack.
- The illustration on this page is schematic. Details of the shape are omitted.

Installation procedure

Step 1

Remove the four rubber feet from the bottom of the recorder using a flathead screwdriver.
Use a screwdriver to remove the screws holding the rubber feet.

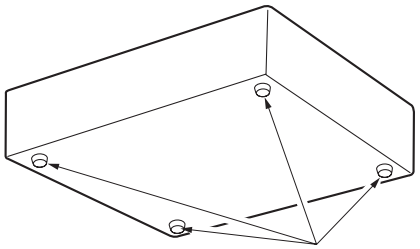

Remove rubber feet

Step 2

Place the provided rack mount brackets (WV-Q202: option) on both sides of the recorder and fix them with the rack mount bracket fixing screw (provided) (x6).
Secure them using the rack mount bracket fixing screw (Provided with the rack mount bracket) (×4).
Tightening torque: 0.88 N·m ~ 1.08 N·m

Rack mount bracket fixing screws (M4×10 provided with the bracket)

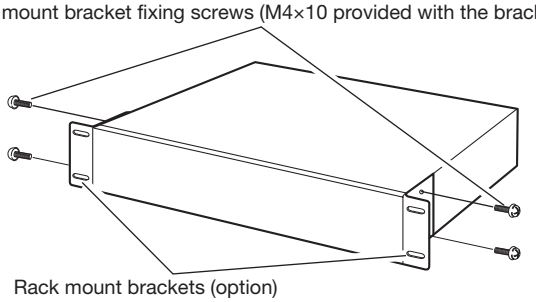

Rack mount brackets (option)

Note:
- The rack mounting brackets has two types of screw stoppers to adjust the position of the recorder on the front side. Use them according to the installation.

Step 3

Install the recorder in the rack by using four rack mounting screws.
Secure using the rack mounting screws (×4).
Tightening torque: 2.0 N·m ~ 2.4 N·m

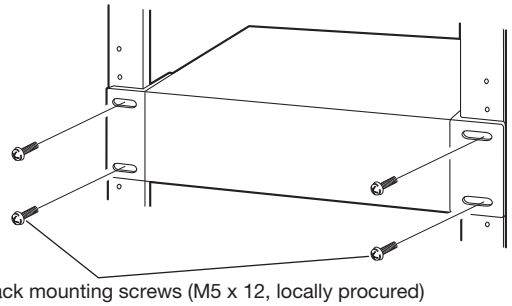

Rack mounting screws (M5 x 12, locally procured)

Important:
- When installing the recorder in the rack, make a space of 1U (44 mm) above and below the recorder for ventilation.
- Keep the temperature in the rack below +45 °C.
- It is recommended to install cooling fans or equivalents to keep the temperature in the rack below +30 °C.
- Do not block the ventilation holes or slots to prevent the recorder from overheating.

4 Connections

Connection of cameras and a mouse

Up to 32 cameras can be connected to the Camera/PC port of the recorder via a PoE hub.
Use a Ethernet cable (straight) to connect the recorder and the PoE hub.
Connect the provided mouse to the mouse connection port on the front or rear side of the recorder.

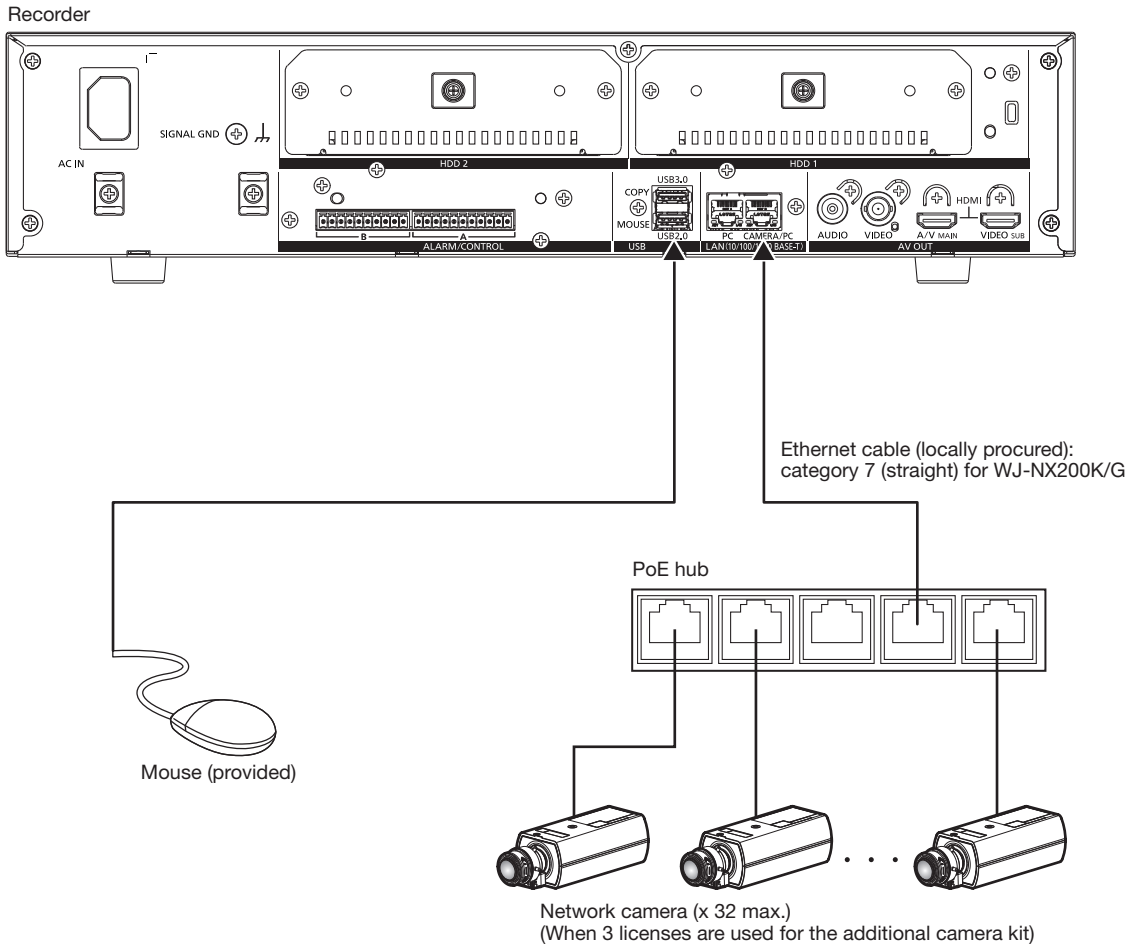

Note:

- Make sure to use the wired network to connect with the recorder even for the cameras equipped with the wireless LAN function.

Connection of monitors

Connect a main monitor (to be used to display live images, recorded images or the setup menu) and a sub monitor (to be used to display live images only) to the HDMI (video/audio output) connectors using HDMI cables (optional). Connect a sub monitor (BNC) to the video output connector using a BNC cable (locally procured).

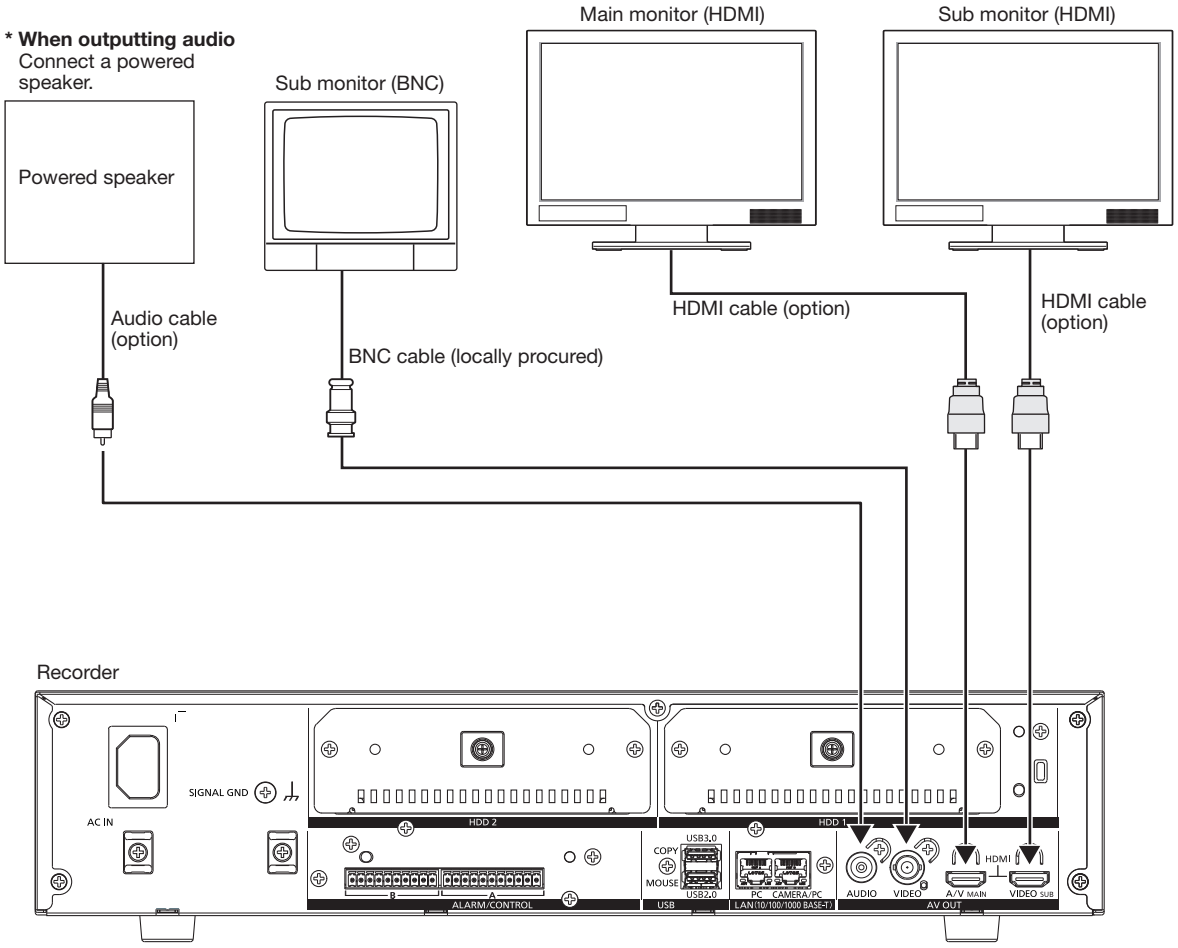

Note:

- Use "High Speed HDMI® Cable". When the main monitor is used in 4K/25P(30P), use a 10.2 Gbps compatible HDMI cable.
- To maintain the stable performance without deteriorating the image quality, use an HDMI cable whose length is 5 m or less.
- Audio will be output from the monitor when the monitor is connected with an HDMI cable.
- Same audio output from the main monitor will be heard from the speaker connected with an audio cable.
- No audio will be heard from the sub monitor (HDMI) connected with an HDMI cable.

Connection of a PC

Connect this recorder and a PC via a PoE hub.

When PC and the camera are in the same network

When the PC and the camera are configured on the same network, connect the PC to the Camera/PC port via a PoE hub.

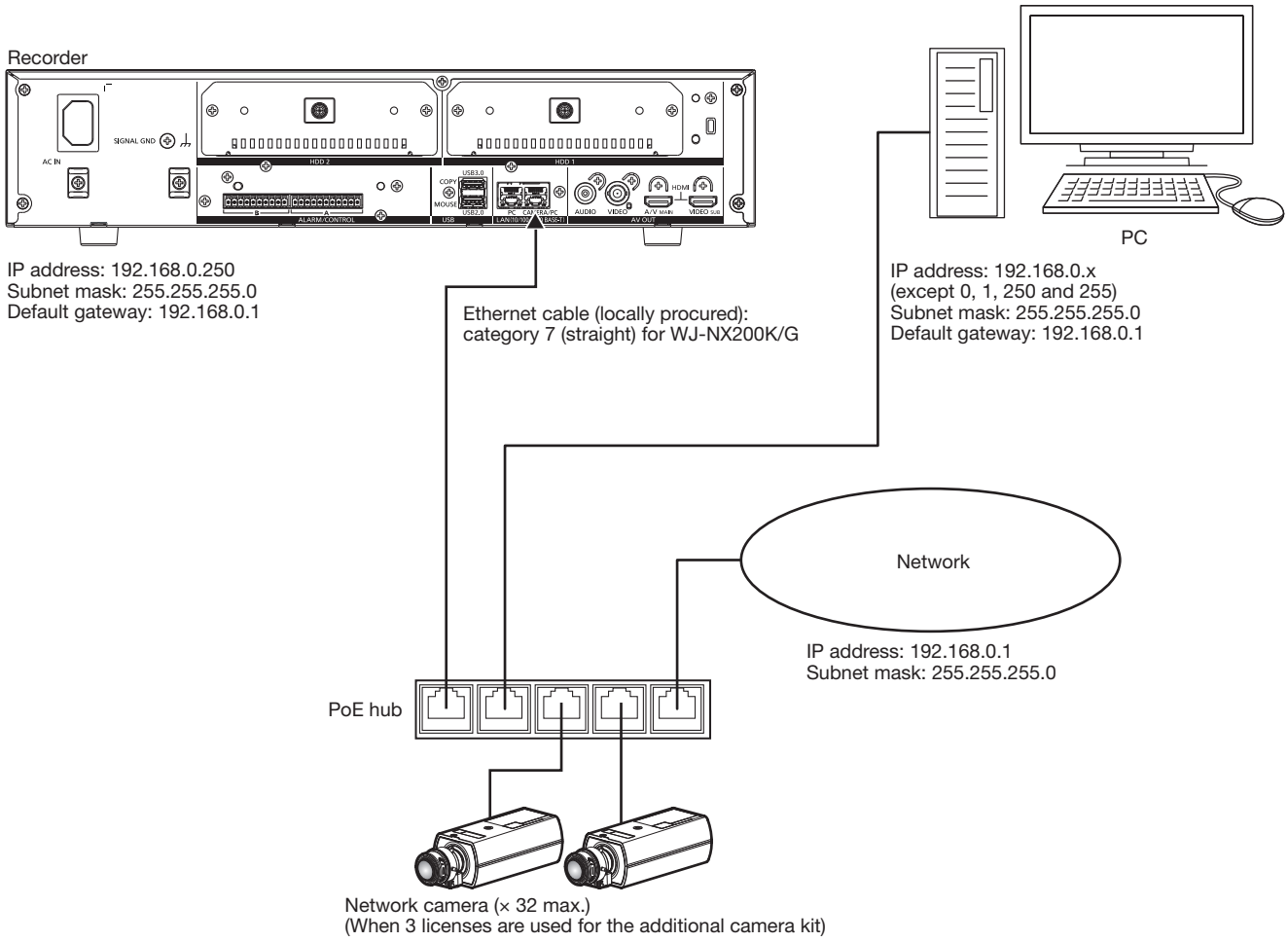

When PC and the camera are in different networks

When the PC and the camera are configured on different networks, connect the PC to the PC port via a switching hub.

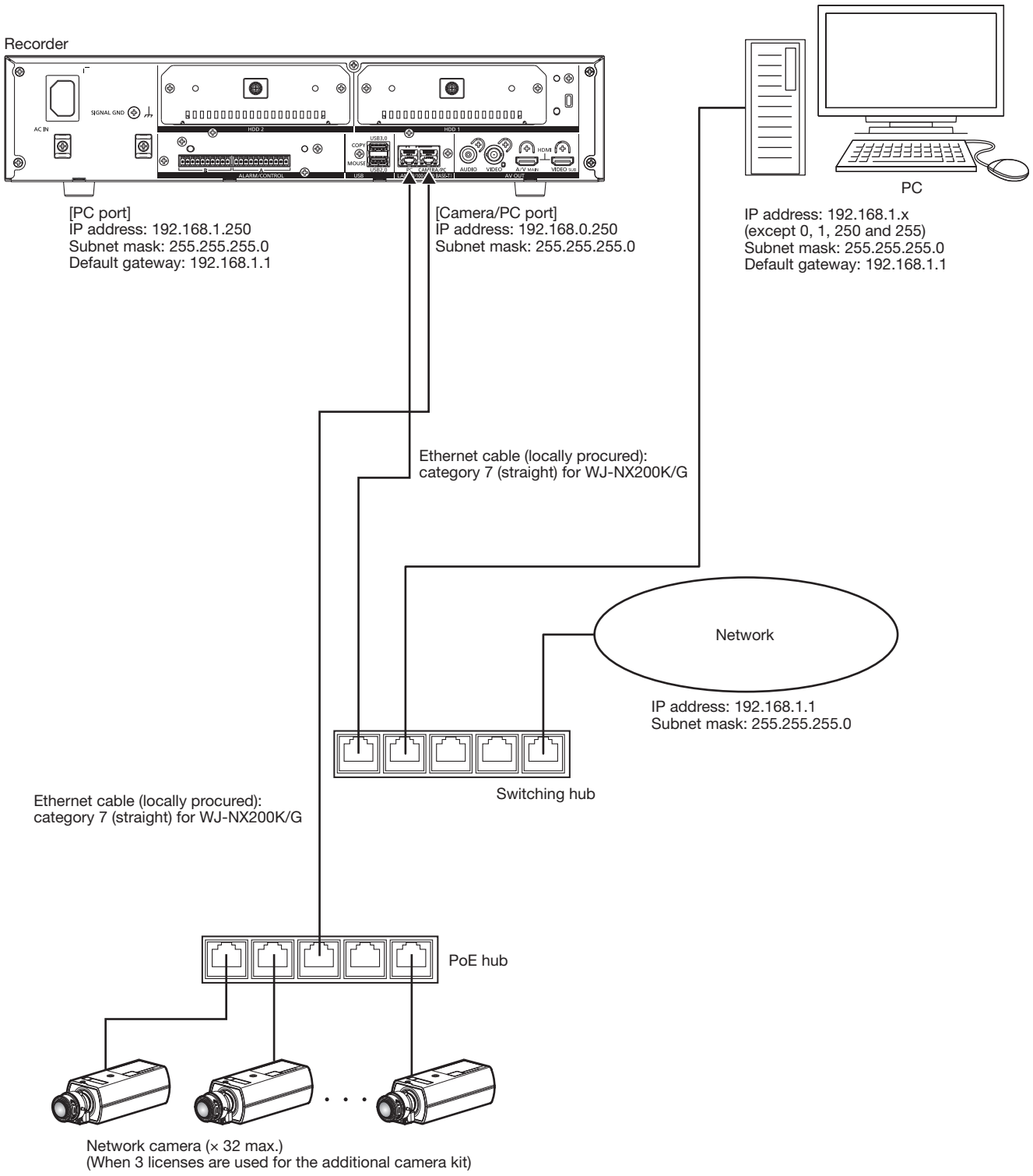

Note:

- Cameras shall be connected to the camera/PC port. If the camera is connected to the PC port, the camera will not be detected automatically.

How to use the terminals of the ALARM/CONTROL

The ALARM/CONTROL connectors on the back is used when connecting an external device such as a sensor that outputs alarm signals or when installing an external alarm device such as a buzzer or a lamp outside.
Insert the unarmored cable into the provided terminal plug and then mount it on the ALARM/CONTROL connector on the back.
* The cable should be a single or twisted wire with AWG 26~16 and an exposed length of 9 mm.

ALARM/CONTROL connector B

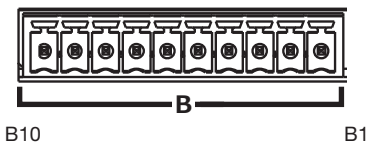

ALARM/CONTROL connector B socket

Cable connections

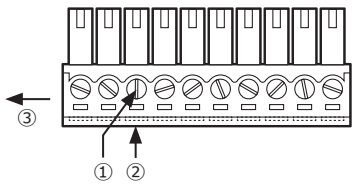

Terminal plug (10 pin)

① Loosen the screw of the desired terminal on the terminal plug.

② Tight the screw when the cable is fully inserted into the terminal hole.

③ Mount the terminal plug with the cable connected on the ALARM/CONTROL connector socket on the back.

Pin array

Pin No.	Signal	Operation	Remarks
B1	Alarm reset input	Canceling the alarm display	Non-voltage make contact input +3.3 V pull-up Approx. 23 kΩ
B2	Emergency recording input	Starting emergency recording signal input	
B3	Time adjustment I/O	According to the signal input from the other device, the time of the recorder will be adjusted to the hour based on the input time In addition, the signal is output at the setting time of the recorder and the time of other equipment is adjusted to the time of the recorder	Input: Non-voltage make contact input +3.3 V pull-up Approx. 23 kΩ Output: Open collector output 24 V DC max., –200 mA max.
B4	Network error output	A signal will be output upon detection of a disconnected Ethernet link or IP expiration of the DHCP	Open collector output 24 V DC max., –200 mA max.
B5	Camera error output	Signal output upon detection of a camera error	
B6	HDD error output/ Recording error output	Signal output upon detection of an HDD error or recording error in this product	
B7	Recorder error output	Signal output upon detection of a recorder error	
B8	Face matching output	Signal output at the occurrence of a face matching alarm	
B9	+5 V output	+5 V output	+5 V±0.5 V, 200 mA max.
B10	Signal ground		

Connection example for emergency recording

When the external switch is turned on, emergency recording will start.
Recording time and recording rate for emergency recording differ according to the settings of "Emergency rec." on the setup menu. (Refer to the Operating Instructions.)

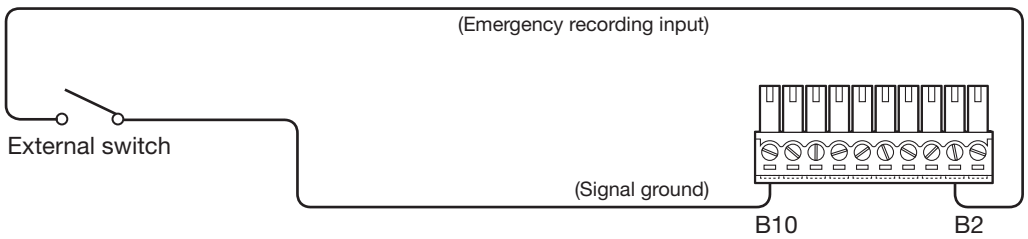

Connection example 1 for the auto adjustment time function

When "Auto time adjustment" found in "Date & time settings" under "Date/Language" on the setup menu is set to "Master".

"Time adjustment output" becomes available and the clock of this recorder will be applied to other devices.
The time adjust output signal will be supplied from B3 terminal to other recorders at the time set for "Activation time" of "Time & date" under "Basic" on the setup menu.

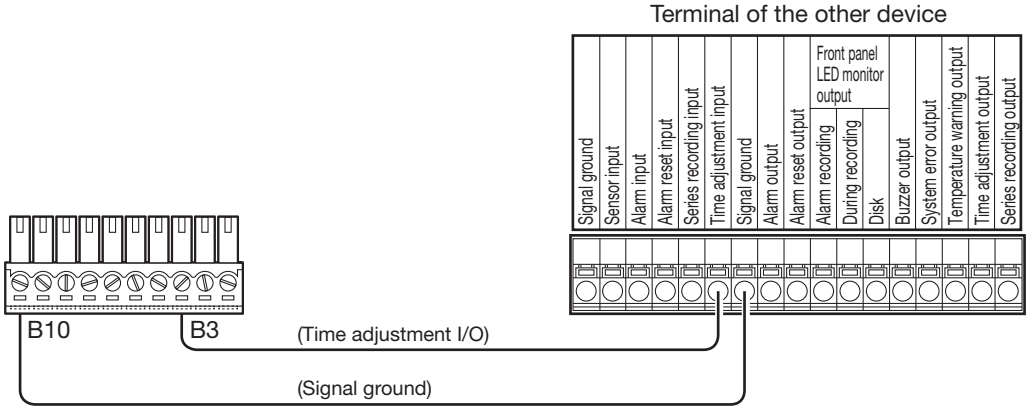

Connection example 2 for the auto adjustment time function

When "Auto time adjustment" found in "Date & time settings" under "Date/Language" on the setup menu is set to "Slave".

When a signal output from the other device is supplied to the time adjustment I/O (B3 terminal) and the time difference between the recorder and the other device is 29 minutes or less, the clock of the recorder will be set to the time set for the other device.
When a signal output is supplied to the recorder 29 minutes before/after the hour, the clock of the recorder will be set to the hour (nn:00:00). ("nn" is the hour.)
Example:

- Signal is supplied at 2:50:00 pm → Set at 3:00:00 pm
- Signal input supplied at 3:28:45 pm → Set at 3:00:00 pm
- Signal is supplied at 3:29:30 pm → Time will not be adjusted.

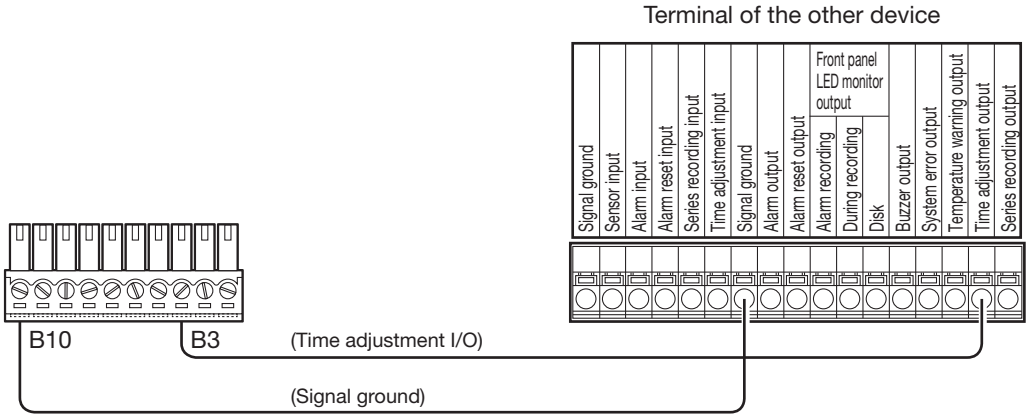

Important:

- When "Slave" is selected, the clock will not be adjusted during event recording or emergency recording.

Connection example of control output

When an alarm device such as a buzzer or a lamp is connected, the signal output from terminal B4~B7 can be used to notify the status by sounding a buzzer or lighting a lamp.
The following example is of a connection with the HDD error output /Recording error output (B6 terminal).

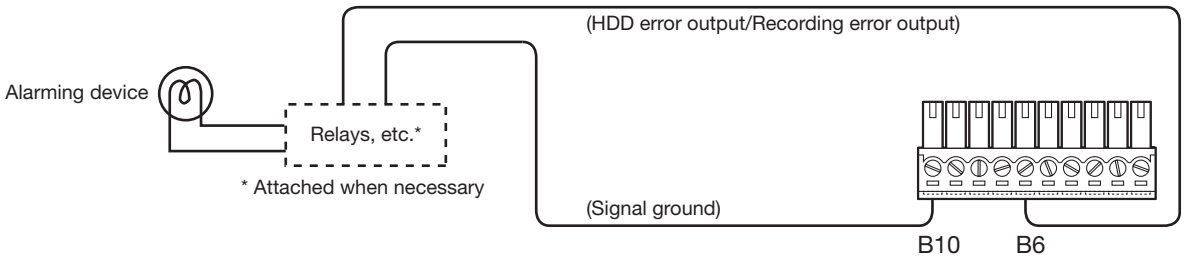

ALARM/CONTROL connector A

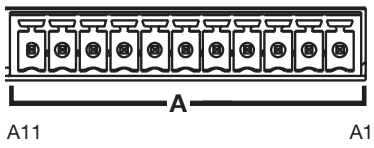

ALARM/CONTROL connector A socket

Cable connections

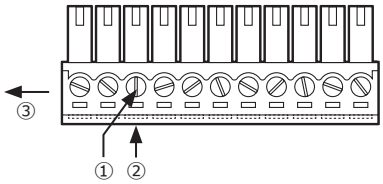

Terminal plug (11 pin)

① Loosen the screw of the desired terminal on the terminal plug.

② Tight the screw when the cable is fully inserted into the terminal hole.

③ Mount the terminal plug with the cable connected on the alarm input terminal socket on the back.

Pin array

Pin No.	Signal	Operation	Remarks
A1	Alarm input 1	Event action will be performed according to the settings	Non-voltage make contact input +3.3 V pull-up Approx. 23 kΩ
A2	Alarm input 2		
A3	Alarm input 3		
A4	Alarm input 4		
A5	Alarm input 5		
A6	Alarm input 6		
A7	Alarm input 7		
A8	Alarm input 8		
A9	Alarm input 9		
A10	Alarm output	Alarm signal will be supplied at an event occurrence	Open collector output 24 V DC max., –200 mA max.
A11	Signal ground		

Alarm connection example

When a signal output from the other device is supplied to the Alarm input 1 to 9 terminals (pin nos. A1~A9), recording or an alarm action will be performed in accordance with the settings. When an alarm device such as a buzzer, a lamp, etc., is installed outside, connect them to the Alarm output terminal (pin no. A10).

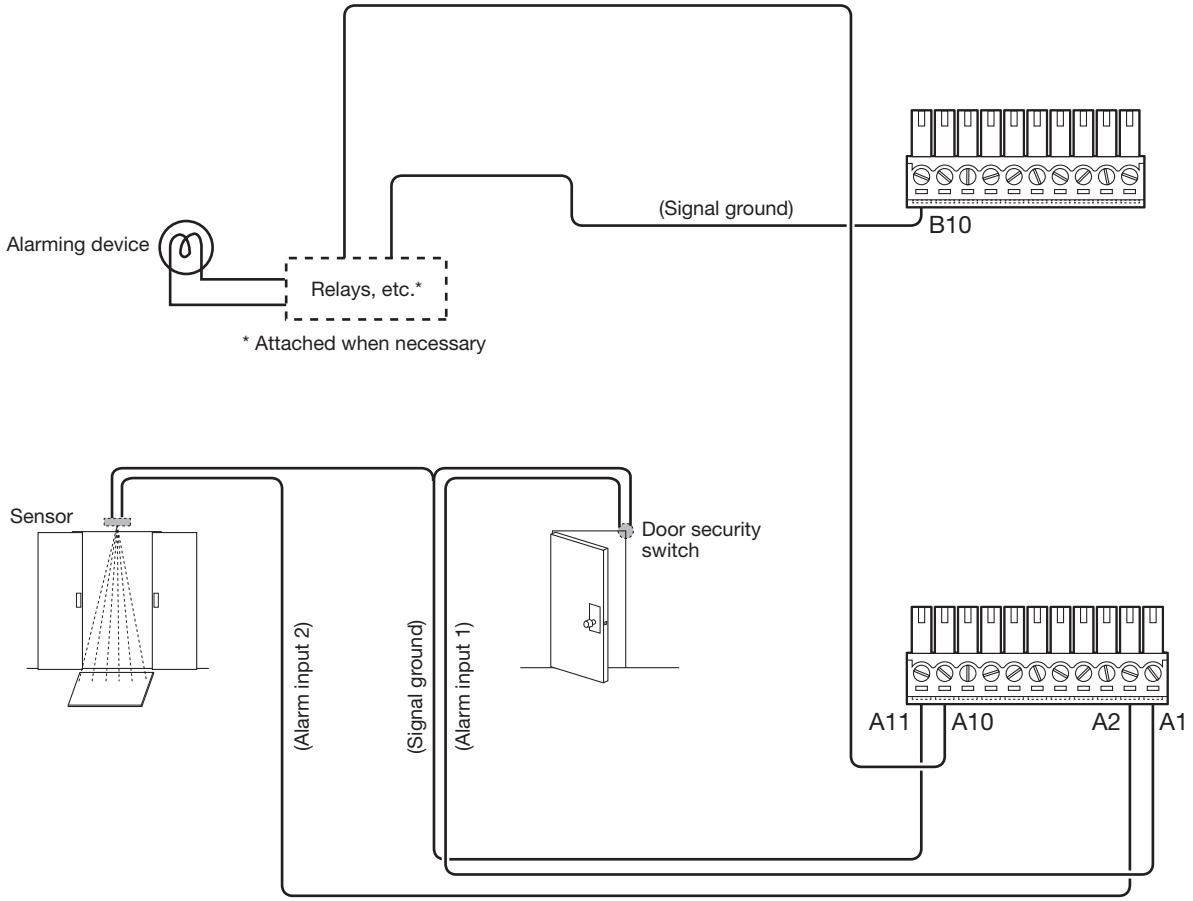

Time and polarities of the ALARM/CONTROL connector

Terminal name	Active Time	Remarks
Alarm input	100 ms or more	N.O.: L active N.O.: H active
Alarm reset input	100 ms or more	L active
Emergency recording input	100 ms or more	L active
Network error output	At an error occurrence until the period selected for "Error output duration" has passed*	L active
HDD error output/ Recording error output	At an error occurrence until the period selected for "Error output duration" has passed*	L active
Camera error output	At an error occurrence until the period selected for "Error output duration" has passed* or the camera reset	L active
Recorder error output	At an error occurrence until the period selected for "Error output duration" has passed*	L active
Alarm output	The set time on the setup menu	L active
Time adjustment I/O	Input: 100 ms or more Output: The set time on the setup menu	Input/Output: L active

* The error output duration is configured on the "Advanced setup" menu - the "Maintenance" page - "System management" of the setup menu. (☞ Operating Instructions (PDF))

Note:

- During "L active (Low active)", the logic will be implemented when the voltage level of signal is low.
- During "H active (High active)", the logic will be implemented when the voltage level of signal is high.

5 Turn on the devices

Turn on the power of the recorder

Turn on the power of the recorder. When using the recorder for the first time, register the license for the recorder. (☞ Page 27)

Step 1

Connect the provided power cord to the power cord inlet on the rear panel of the recorder, and insert the power plug to an outlet whose rating is as follows.

WJ-NX200K/G: 220 V - 240 V AC, 50 Hz/60 Hz

→ The [OPERATE] indicator on the front of the recorder will light, the system check will start, and the startup window will be displayed on the main monitor.

Important:

- Never turn off the power of the recorder during startup.
- Insert the power cord fully into the power supply terminal so that it will not loosen or come out.
- Fix the power cord firmly at 15 cm to 20 cm from the plug with the provided power cord clamp to prevent the cable from unplugging.

How to prevent power cord disconnection

Fix a 15 cm ~ 20 cm space from the power cord connector with the attached cable clamp passed through the clamp mount.

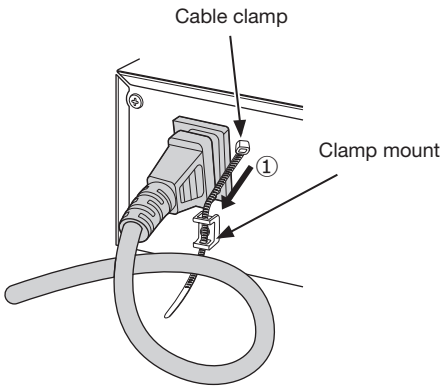

①Pass the cable clamp (provided) through the clamp mount.

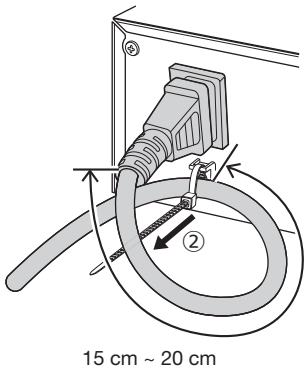

②Tighten the power cord at 15 cm to 20 cm from the connector and fix it to the clamp mount.
Cut the surplus part of the cable clamp as necessary.

Step 2

The administration registration window is displayed on the main monitor.

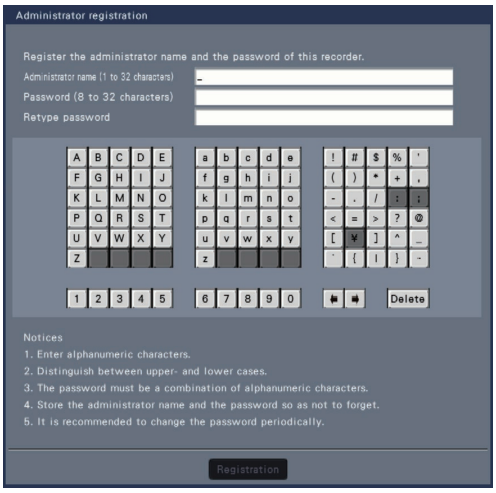

Enter an administrator, a password and a password confirmation following the instruction on the display, and click [Registration].
Clicking [OK] on the displayed confirmation screen completes the administration registration.

Important:
- Change the password periodically.

Precautions on storing the administrator name and the password

If you forget the set administrator name and password, you need to initialize* the recorder. Once the recorder is initialized, all the settings are deleted. Keep information on the administrator name and the password in a safe place where nobody can see it except you.
* Contact your dealer for initializing.

Step 3

If the license for the recorder has not been registered yet, the message asking you to register the "Registration Key" will be displayed after the completion of the system check and the administrator registration.

If the "Registration Key" for the recorder has not been registered yet, register the "Registration Key" by following the procedures on page 27.

Note:
- If the "Registration Key" for the recorder is once registered, the message asking you to register the "Registration Key" will not be displayed from the next time.

(When turn off the power of the recorder)

Follow the procedure below to turn off the power.

Step 1

During recording, set "Recording mode" on [Advanced setup] tab under "REC & event" under [Basic Setup] from Setup menu to "Off" to stop all recordings. (☞ Operating Instructions (PDF))

Step 2

Unplug the power plug from the power outlet after confirming that the [REC] indicator is off.

→ [OPERATE] indicator on the front of the recorder will go off.

Important:
- Remove the plug from the outlet if not operating the recorder for a long period.

Note:
- Be sure to perform the operation to start recording (select "On" for "Recording mode") after turning on the power of the recorder again.

6 Register the license (Registration Key)

When using the recorder for the first time, using the secure function, or increasing the number of the cameras to be connected, it is necessary to register the recorder license (Registration Key).

Important:

- In the following cases, the recorder must be rebooted by clicking the [Restart] button. The licenses will not be effective until the recorder is rebooted.
  - When the Registration Key of the recorder is registered
  - When the license of the additional camera kit or the additional business intelligence kit is added
- The added cameras shall be registered on "Easy Start" (☞ Page 29) or on the "Camera registration" tab. Each setting value is the default. Configure each setting according to your needs.

Step 1

Obtain the "Registration Key" for the recorder by following the instructions on the provided "Activation Key Card".

To use each extra function, get the "Registration Key" of each additional license according to the appropriate Additional kit (option).

Refer to the "Activation Key Card" for further information.

Step 2

Start the recorder. (☞ Page 25)

→ When the system check is complete, the operational screen will be displayed on the main monitor.

Step 3

Click the [Setup] button.

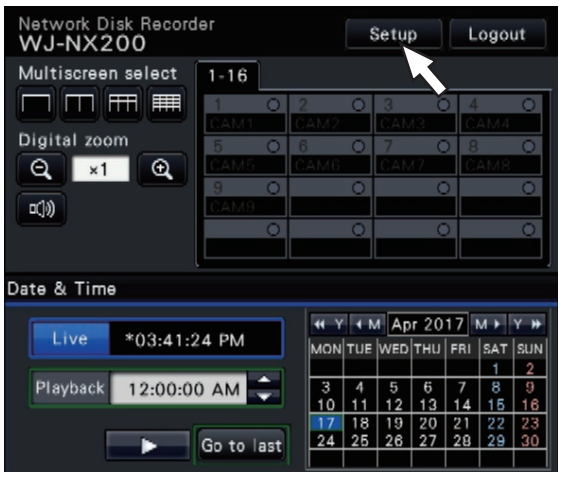

→ The setup menu will be displayed.

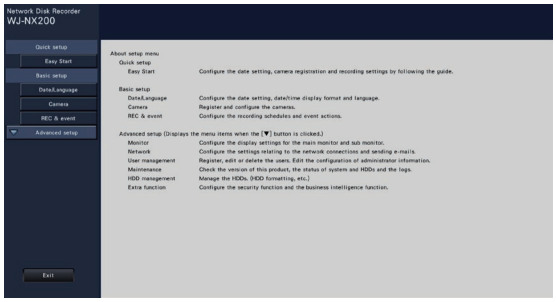

Step 4

Click [Advanced setup] - [Maintenance] - the [System management] tab on the setup menu.

→ The "System management" page will be displayed.

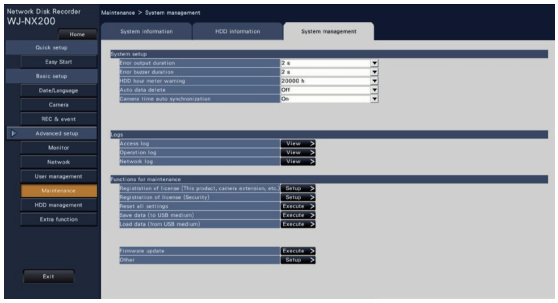

6 Register the license (Registration Key) (continued)

Step 5

Click the [Setup >] button of [Registration of license (This product, camera extension, etc.)].

→ The registration window will be displayed.

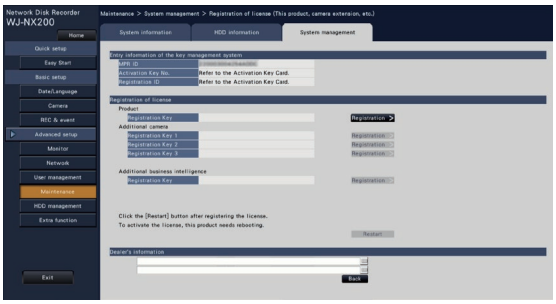

Step 6

Click the [Registration >] button of "Product" - "Registration Key".

→ The "Registration key input" window will be displayed.

Step 7

Enter the "Registration key" for the recorder in the "Registration key" field using the on-screen keyboard, and click the [Registration] button.

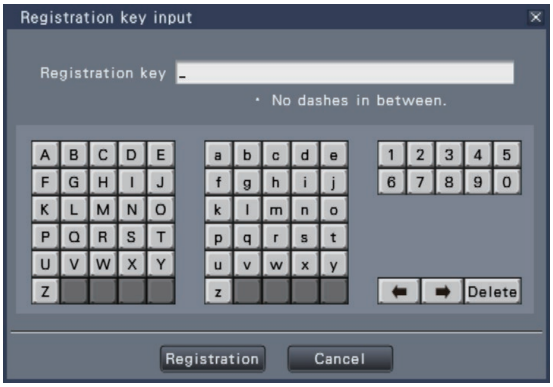

→ The "Registration key input" window will return to the registration window.

Note:

- When an error message is displayed, enter the effective "Registration Key" again on the entry field.

Step 8

To increase the number of connected cameras, enter the registration key of the additional camera license obtained in step 1 to the "Registration Key 1-3" fields under "Additional camera" on the "Registration of license" page shown in step 5.

To use the business intelligence function, enter the "Registration Key" following "How to register the license" in the user manual of the additional business intelligence kit.

To use the secure function, click the [Setup >] button of [Registration of license (Security)] under the system management screen shown in Step 4, and then enter the registration key of the secure communication license obtained in Step 1 in the "Registration Key 1-32" fields under "Secure communication" on the "Registration of license" page.

The operations are the same as those of Step 6 and 7.

Note:

- Register the registration key for the recorder first, and then for each additional licenses.

Step 9

Click the [Restart] button on the registration window to register the license.

→ The recorder will reboot and each license will become effective.

7 Configure the minimum settings [Easy Start]

The minimum settings required to operate the recorder, such as the date & time, camera registration, recording, can be configured on the setup menu - the "Quick setup" menu - "Easy Start".
First, configure the minimum settings on "Easy Start", and to configure more advanced settings, go to each setup page.

Available settings on "Easy Start"

- Date & time of the recorder
- Camera registration
- Order change of the registered camera numbers
- Recording frame rate, image quality and audio

* Other settings will remain default or will be conformed to the camera settings.
* To apply 25, 50 or 60 ips for the recording frame rate, configure on the advanced recording setup (for each camera) on the "Recording setup" tab under "REC & event" of "Basic setup", but not on Easy Start.
* To reset the time, do not use "Easy Start", and go to "Basic setup" menu - "Date/Language" page.

Step 1

Click the [Easy Start] button on the top screen of the setup menu.
Refer to "Basic operations" (☞ Page 7) for how to display the setup menu.

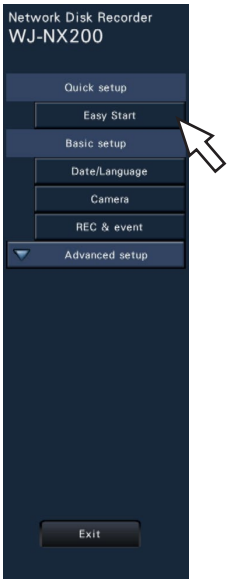

→ The setup menu for the date & time will be displayed.

Step 2

Set the date & time.

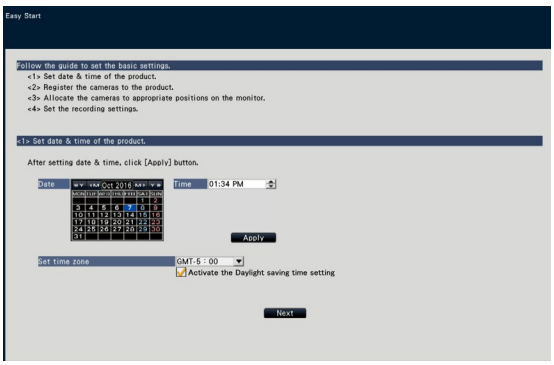

[Date]

Set the current date. Select the year and month using the buttons of the calendar and click the date.
[<<Y]/[Y>>] button: Selects the previous or next year.
[<M]/[M>] button: Selects the previous or next month.

[Time]

Set the current time.

Step 3

Click the [Apply] button after setting the date & time.
→ The second will be set to "00".

[Set time zone]
Select your time zone.
GMT-12:00 - GMT+13:00
Default: GMT
Marking the checkbox for [Activate the Daylight saving time setting] will active daylight saving time.

Step 4

Click the [Next] button.
→ The camera registration window opens.

Note:

- To use the existing IP address of the connected cameras, refer to "Detect cameras for registration [Detect cameras]" (☞ Operating Instructions (PDF)) instead of "Easy Start".
- Before the settings, register the cameras into the network. Only the cameras added by license registration will be detected even though more cameras than the registered license number are connected.
  It is recommended to disconnect unnecessary cameras.
- Cameras shall be connected to the Camera/PC port. Cameras will not be detected if they are connected to the PC port.

Step 5

Register the cameras connected to the recorder.

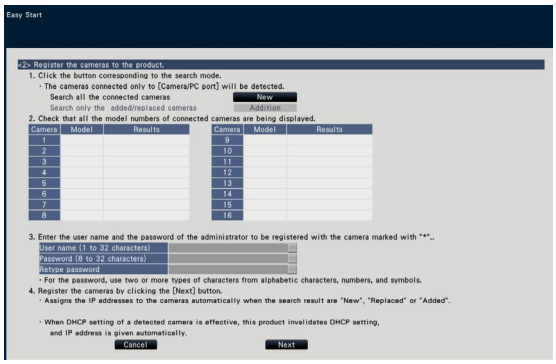

[New] button

Usually use it with no camera registered in the recorder.
Detects all the connected cameras.
The models and results of the detected cameras will be displayed.
Make sure that the model numbers of all the connected cameras are being displayed.

[Addition] button

Usually use it when there are added or replaced cameras during operation.
Detects only the added or replaced cameras.
The models and results of the detected cameras will be displayed.
Make sure that the model numbers of all the added or replaced cameras are being displayed.

Important:

- When there are cameras in use, the system can overwrite the registered information and assign new IP addresses to all connected cameras (including cameras currently in use) by clicking the [New] button.
- Cameras newly added after the operation start will be registered in the default settings. To conform the settings to those of the registered cameras, perform the settings for the added cameras.
- For the video encoder (WJ-GXE500), only the camera connected to CH1 will be detected. The channels CH2 to CH4 are needs to be registered from the setup menu.

[Camera]

After the license is registered (☞ Page 27), 9, 16, 24 or 32 cameras can be connected.

[Model]

When Panasonic cameras are used, the model numbers will be displayed.

[Results]

New: Displayed when the camera is newly connected to the recorder.
Replaced: Displayed when the camera has been replaced by another one.
Added: Displayed when the camera connection is added to the recorder.
Registered: Displayed when the camera has already been registered.
Lost: Displayed when the registered camera is not detected.
Blank: No camera is detected.
*: Administrator not registered

Note:

- If "Lost" is displayed or the column is left blank, check if the power of the camera is turned on, and make sure that cables are properly connected.

Step 6

Enter a user name and a password to register for a camera with "*" in the results.

Step 7

Click the [Next] button.

→ IP address will be given to the cameras newly connected, replaced or added, and the images from the camera will be displayed on the operational screen.

Note:

- On "Easy Start", it is impossible to register the camera in a different network via the same router.
- For the security enhancement, changing of the IP address of the camera will become impossible when 20 minutes have passed after the power is turned on. Perform the camera detection within 20 minutes, or turn off the power of the camera and turn it on again if more than 20 minutes has passed. Refer to the operating instructions of the camera for further information. When 20 minutes have passed after the power of the camera is turned on, "ONVIF" may be detected depending on the models of Panasonic cameras. In such a case, turn off the power of the camera and turn if on again to perform the camera detection.
- When "On" is selected for the "DHCP" setting of the detected cameras, the recorder will forcibly change the setting to "Off" to give the IP addresses automatically.
- When the [Cancel] button is clicked, the top screen of "Easy Start" (the menu to set the date & time) without applying the camera detection result will be displayed.

Step 8

When you wish to change the registered camera numbers, it is possible to change the order of the camera numbers.

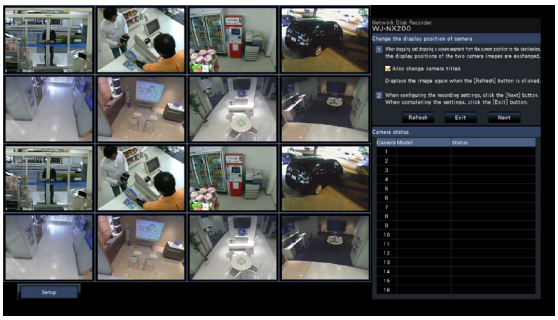

Images from the cameras will be displayed on the monitor from the upper left corner to the right in order of the camera number (1, 2 ... 16). (When the camera configuration is set to 16 or less, images are displayed on the 16-screen. If it is set to 32, images are displayed on two 16-screen.)
To interchange camera numbers, drag the camera image to be moved with the mouse and drop on the desired position.
If the camera titles are to be interchanged as well, mark the "Also change camera titles" checkbox.

[Camera status]

The model numbers and statuses of each camera will be displayed in a list.

Displaying image: Displays the images from the camera using the IP address that is newly registered or that has already been registered.

Changing IP address: Images are being obtained from the camera whose IP address has been changed.
Undetectable: Cannot obtain images from the camera.
Authentication error: Failed in the authentication to display images from the camera.

Important:
- If "Undetectable" is displayed, check the camera connections, and retry the camera registration.
- If "Authentication error" is displayed, initialized the camera and retry the camera registration by referring to the operating instruction of the camera.
- If the registered camera is not correctly detected or if you wish to change the camera settings, change the registered information on the "Basic setup" menu - the "Camera" page - the "Camera registration" tab. (☞ Operating Instructions (PDF))

[Refresh] button
Obtain the latest camera image after interchanging cameras.

[Exit] button
Exits the setup menu and returns to the top screen of the setup menu.

[Next] button
Proceeds to the settings for recording.

Step 9

Perform the settings for recording. If the settings are performed on "Easy Start", the settings will be applied to all the cameras.

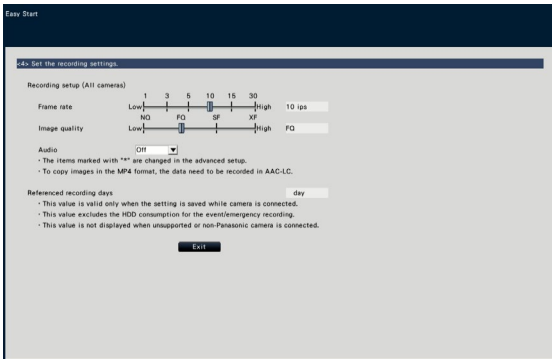

[Frame rate]
Select the recording frame rate.
1 ips/ 3 ips/ 5 ips/ 10 ips/ 15 ips/ 30 ips
Default: 10 ips

Important:
- To apply 60 ips, configure on "[Advanced >] of the "Recording setup (All cameras)" on the "Recording setup" tab under "REC & event" of "Basic setup".
- For a camera whose compression method is [MJPEG], "10 ips / 15 ips / 30 ips" cannot be selected.
- If a camera whose compression method is [MJPEG] is included, [MJPEG] camera is set to "5 ips" even if "10 ips / 15 ips / 30 ips" is set by slider bar of frame rate setting. You can confirm the current setting value with [Advanced >] in Recording setup (All cameras).

[Image quality]
Selects the image quality of recorded images.
NQ (Normal): Standard quality
FQ (Fine): High quality
SF (Super Fine): Super fine quality
XF (Extra Fine): Extra fine quality
Default: FQ

Important:
- For a camera whose compression method is [MJPEG], "XF" cannot be set.
- If a camera whose compression method is [MJPEG] is included, [MJPEG] camera is set to "SF" even if "XF" is set by slider bar of image quality setting. You can confirm the current setting value with [Advanced >] in Recording setup (All cameras).

[Audio]
Select whether or not to record audio together with images.
On(AAC-LC): Audio will be recorded. (AAC-LC format)
On: Audio will be recorded. (G.726 format)
Off: Audio will not be recorded.
Default: Off

[Referenced recording days]
Calculates and displays the total number of days for which recording on the hard disk drives is available.

Note:
- The referenced recording days will be calculated based on the assumption that recording is started on Monday.
- The HDD consumption for the event recording will be excluded.
- If a camera manufactured by other than Panasonic is used, the value of "Referenced recording days" will not be displayed.
- When configured to perform recording in high resolution and high quality, recording may sometimes not be performed at the specified rate.
  When there may be possibility to fail recording at the specified rate while using only Panasonic cameras, the confirmation window will be displayed.

Step 10

Click the [Exit] button.
→ Saves the settings and returns to the top screen of the setup menu.
When the camera image is displayed on the main monitor or the web browser on the PC and can be recorded or played, the recorder is ready for operation.

Troubleshooting

Before asking for repairs, check the symptoms with the following table.

Contact your dealer if a problem cannot be solved even after checking and trying the solution in the table or a problem is not described below.

Symptom	Cause/solution	Ref. pages
Power is not turned on.	• Is the power plug connected to the outlet firmly? Confirm the cable is firmly connected.	–
	• Check if the power cord is properly inserted into the power socket of the recorder. Check if it is connected firmly.	Important Information
Camera images are not displayed on the monitor	• Is the lens cap of the camera detached from the camera? Check whether the lens cap is removed.	–
	• Is the power of the camera and connected devices on? Check whether the power is supplied to the camera and the devices.	–
	• Confirm that the cables are connected correctly and firmly. Confirm the cables are firmly connected.	16, 17
	• Depending on the HDMI monitor, it may not be displayed properly. Turn the monitor off and on and check whether it is displayed.	–
	• Is the monitor luminance appropriately adjusted, or is the contrast appropriately adjusted? Check whether the settings are appropriate.	–
	• Users who have logged into the system may not be authorized to display the images from cameras. Check the user level settings of these users.	Operating Instructions
Part of the displayed image is missing.	• This phenomenon is caused by dispersion of display area on the monitor. This is not a malfunction.	–
	• When a function to automatically enlarge the images in the connected monitor is enabled, some part of the images may not be displayed depending on the photographic subject.	–
Image is blurred.	• Is the lens of the camera soiled with dirt or dust? Check whether the lens of the camera is clean.	–
Cannot open the setup menu.	• Users who have logged into the system may not be authorized to display the setup menu. Check the user level settings of these users.	Operating Instructions
	• Isn't it the sub monitor you are currently operating? The setup menu cannot be displayed on the sub monitor.	17
The images or embedded characters displayed on the monitor look blurry.	• Depending on the photographic subject or HDMI monitor that is connected, images or embedded characters may look blurry. This phenomenon is not trouble.	–
No alarm action is taken.	• Check if alarm input signals are properly input to the ALARM/ CONTROL connector at the rear panel.	20
	• Are the settings of the alarm connector appropriate?	Operating Instructions
	• Is "Off" or "Recording only" selected for "Mode"? Check whether the settings are appropriate.	Operating Instructions
The "Communication error: Cam.cc" indication is displayed on the main monitor. ("cc" indicates the camera number.)	• Confirm that the camera is connected correctly and firmly. Check the camera connection.	16
	• If the connection is appropriate, the cable may be broken or the camera may be out of order. Contact the dealer.	–

Symptom	Cause/solution	Ref. pages
The "Thermal error" indication is displayed on the main monitor.	• Check if the fan is malfunctioning.	Operating Instructions
	• Check if the recorder ventilation holes or cooling fan are blocked, and also check for dust collected around the ventilation holes.	6
	• The ambient operating temperature is +5 °C to +45 °C. The "Thermal error" is displayed based on the internal thermal information of the HDD. If the "Thermal error" indication is displayed, it is recommended to change the installation environment so that the ambient temperature is maintained at approx. +25 °C. When the "Thermal error" indication is displayed frequently, contact your dealer.	15
The clock of the recorder may keep bad time.	• The clock function of the recorder is accurate within ±30 seconds per month. To keep the correct recording, set the time periodically, or enable the auto time adjustment function on the rear panel terminal, or configure the system using the NTP function so as to keep the correct current time.	–
[HDD] indicator lights/blinks red.	• The hard disk drive is faulty. Contact your dealer.	–
The error indicator blinks red.	• A system error occurred. Contact your dealer.	–
"Authentication error" of the camera is displayed.	• Initialize the camera and retry the camera registration upon referring to the operating instructions of the camera.	–

Inspect the power cord, power plug and connectors periodically.

Symptom	Cause/solution	Ref. pages
The power cord insulation is damaged.	• The power cord, connector, or power plug is damaged. This may result in electric shock or a fire. Unplug the power plug from the AC outlet immediately, and refer to qualified service personnel.	–
The power cord, plug and connectors get hot during use.		
The power cord gets hot when bent or stretched.		

Disposal of Old Equipment and Batteries
Only for European Union and countries with recycling systems

These symbols on the products, packaging, and/or accompanying documents mean that used electrical and electronic products and batteries must not be mixed with general household waste.
For proper treatment, recovery and recycling of old products and used batteries, please take them to applicable collection points in accordance with your national legislation.
By disposing of them correctly, you will help to save valuable resources and prevent any potential negative effects on human health and the environment.
For more information about collection and recycling, please contact your local municipality.
Penalties may be applicable for incorrect disposal of this waste, in accordance with national legislation.

Note for the battery symbol (bottom symbol)
This symbol might be used in combination with a chemical symbol. In this case it complies with the requirement set by the Directive for the chemical involved.

Panasonic Corporation
http://www.panasonic.com

Panasonic Corporation
Osaka, Japan

Authorised Representative in EU:

Panasonic Testing Centre
Panasonic Marketing Europe GmbH
Winsbergring 15, 22525 Hamburg, Germany

© Panasonic Corporation 2017
Ls0417-3068 PGQX2169WA Printed in China